PROFILSYSTEM®

Give life to your project

P50-S35 Plank



P50-S35 Plank

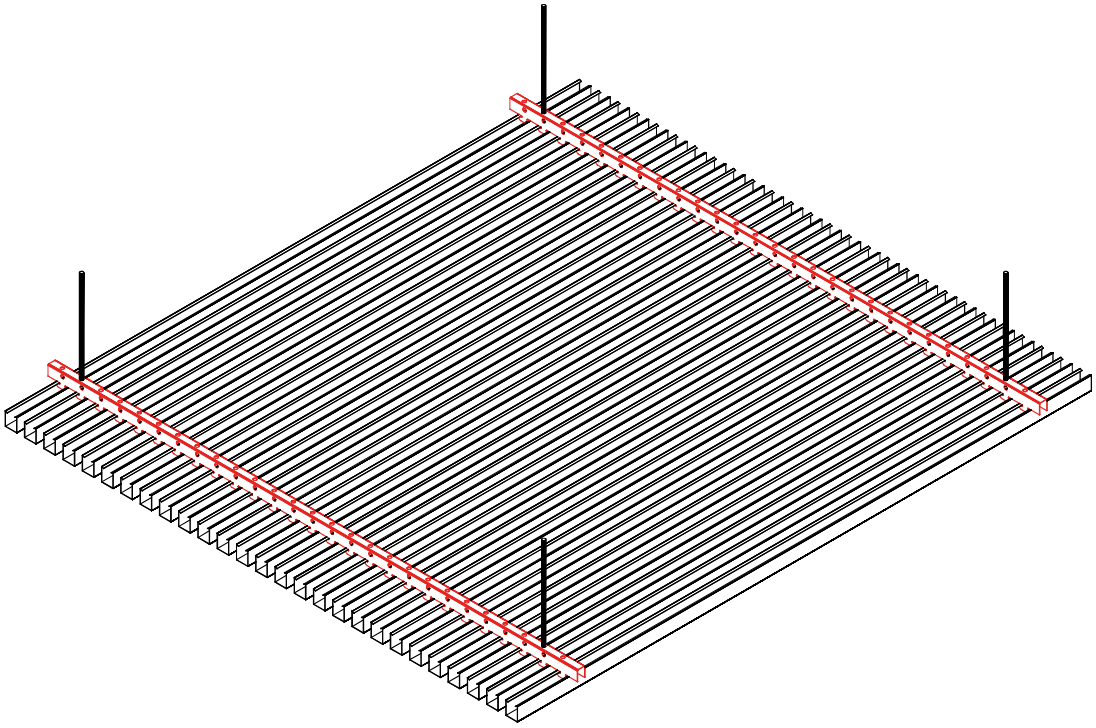

Technical data

Dimensions

BASE : **35 mm**
HEIGHT : **35 mm**
MAX LENGTH : **6000 mm**
WHEELBASE on structure: **50 mm standard or custom**

*Contact the technical department to check the proportion between planks height and wheelbase on the structure.

Fire reaction

EUROCLASS A1
UNI EN 13501-1

Materiali

COIL COATED STEEL
RAL 9010, RAL 9003, RAL 9006
Wood effect

COIL COATED ALUMINIUM
RAL 9003, RAL 9006
Wood effect

Weight Kg/m²

Variable depending on plank size and wheelbase.*

Perforation

Plain plank
R0701
R1511
R211
R2516
D1522
D222

For all perforations, it is possible to apply the ***acoustic fleece***

**other perforation on request*

Sustainability

Recycled content	Green certifications	VOC content
<30%	Leed, Well, Bream	A+

IQNET CERTIFIED MANAGEMENT SYSTEM
quality austria SYSTEMZERTIFIZIERT ISO 9001:2015 NR.12029/0
EPD ITALY
ECO PLATFORM EPD VERIFIED

All dimensions are nominal and expressed in mm.
All details are subject to change without notice.
For any clarifications, please contact our commercial office - +39 0362 625652 - info@profilsystem.com

Components

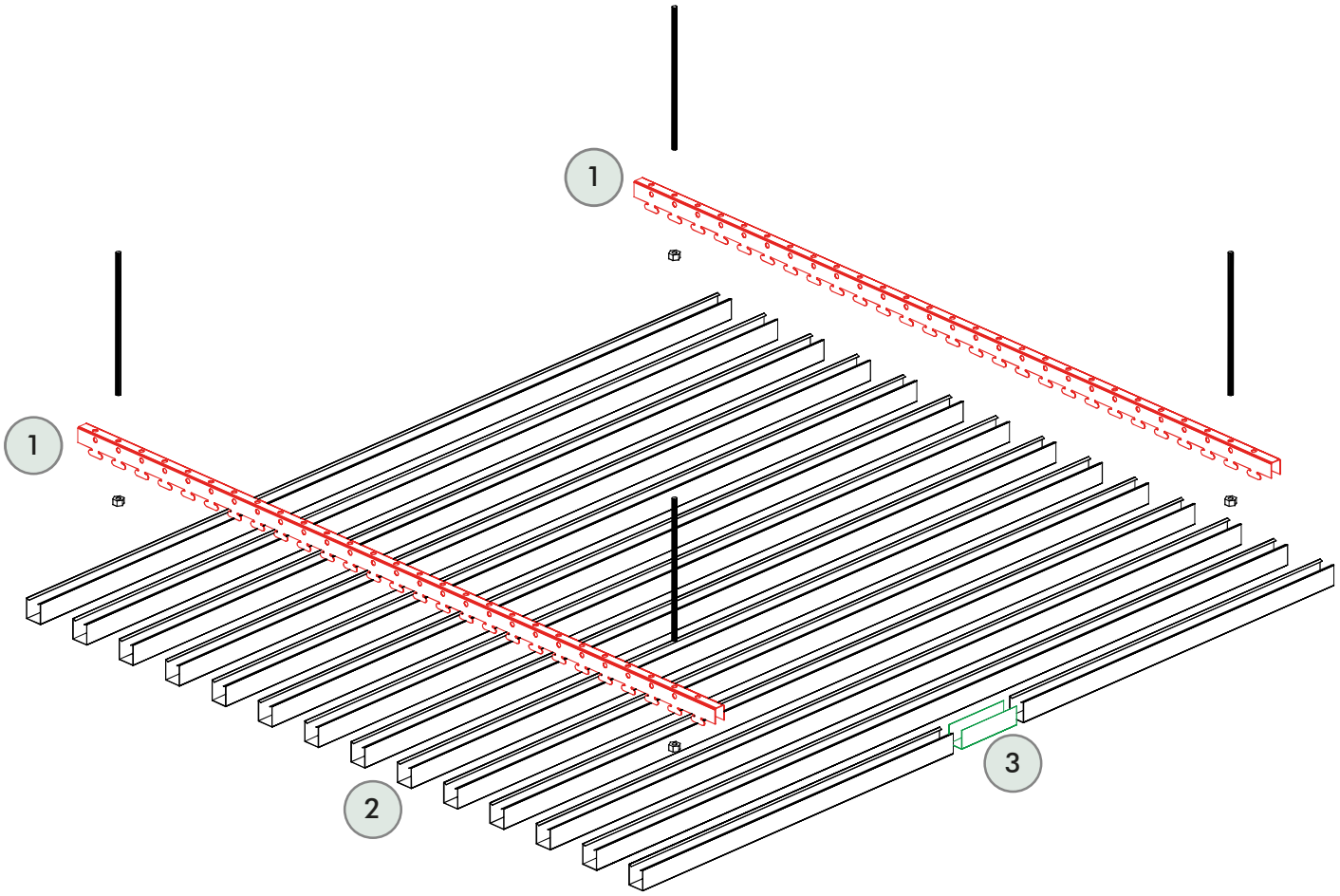

1_Structure

2_P50S35 Planks

3_Joint

NOTE : wheelbase indicated refer to material mounted in interior spaces and completed by any "L" perimeter profile and are to be considered valid only in relation to the weight of the metal ceiling.These indications are generic and in any case remain to be verified for each individual order, in relation to the material identified for the crosspiece and plank, and relative thickness.

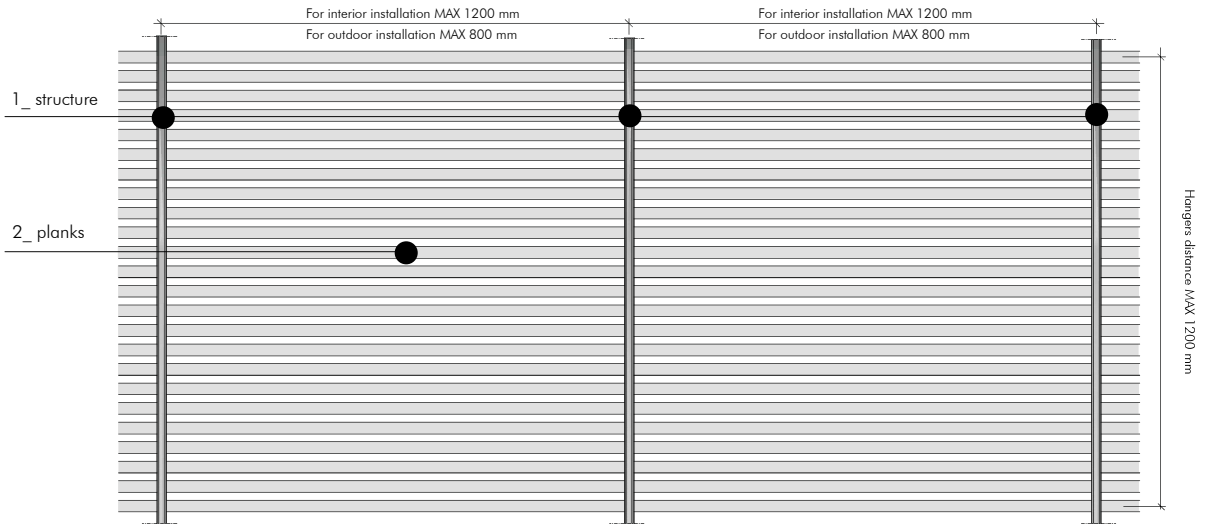

Element

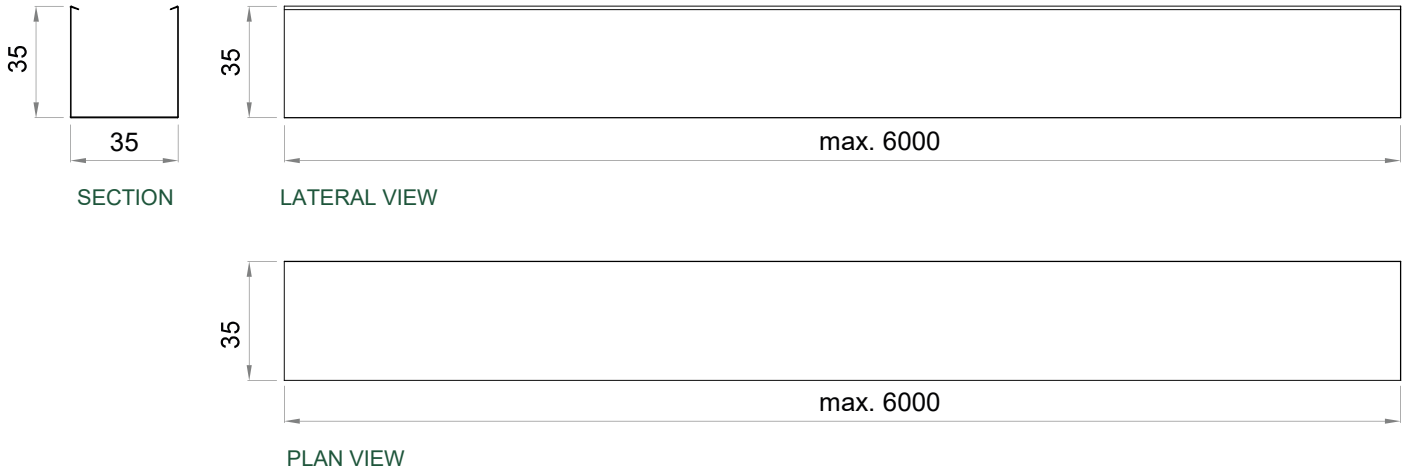

Main sections - Ceiling installation

T1 STRUCTURE

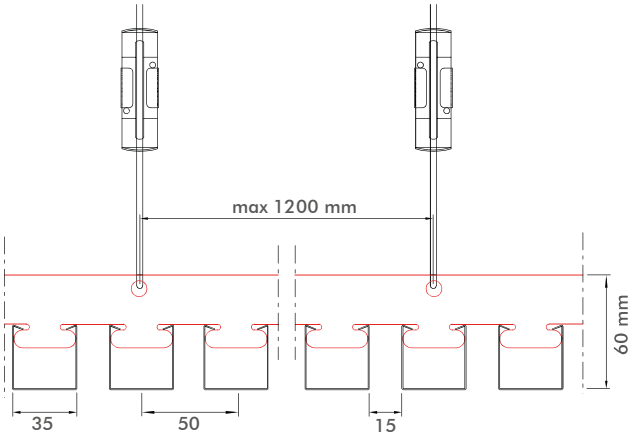

T1 - S (special) STRUCTURE

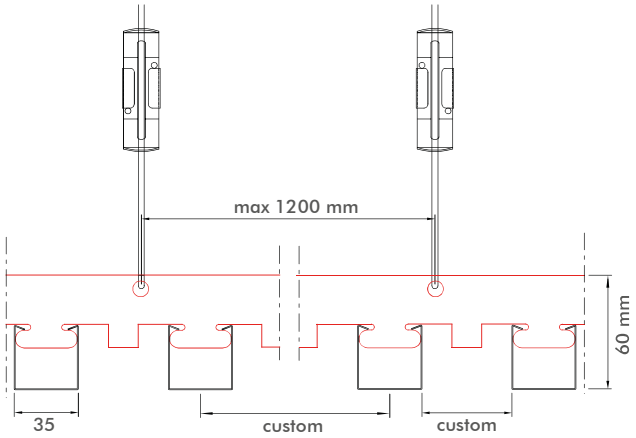

T1R STRUCTURE

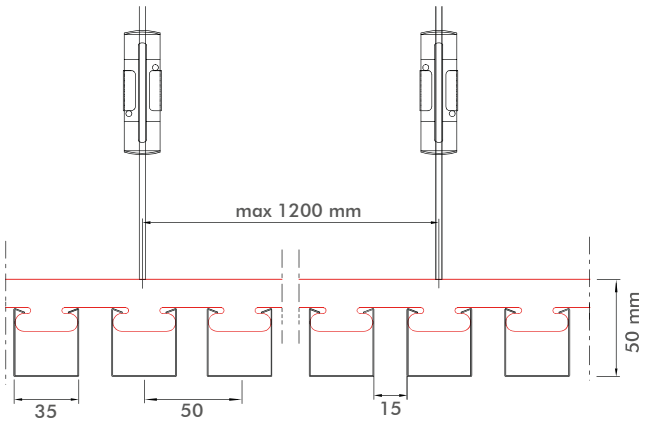

T1R - S (special) STRUCTURE

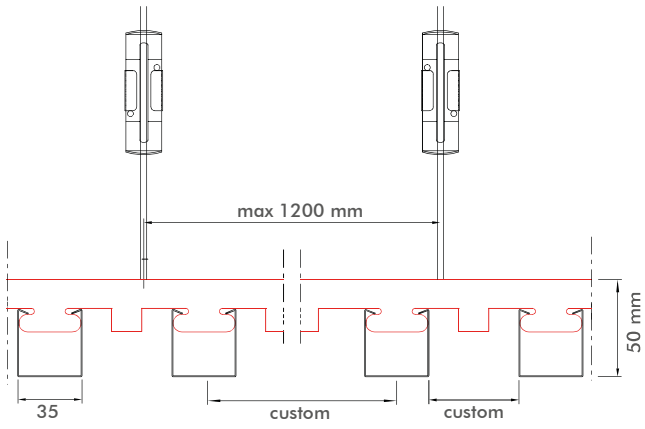

All dimensions are nominal and expressed in mm.
All details are subject to change without notice.
For any clarifications, please contact our commercial office - +39 0362 625652 - info@profilsystem.com

Main sections - Ceiling installation with T1F structure

T1F STRUCTURE

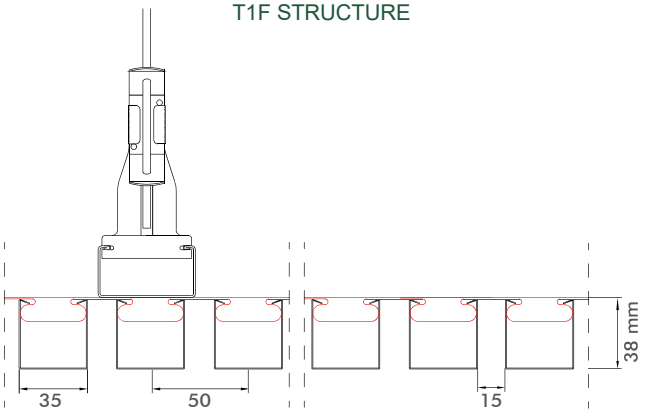

T1F - S (special) STRUCTURE

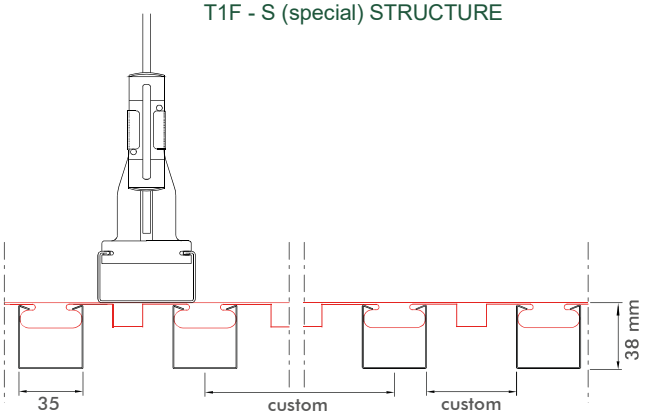

T1F STRUCTURE

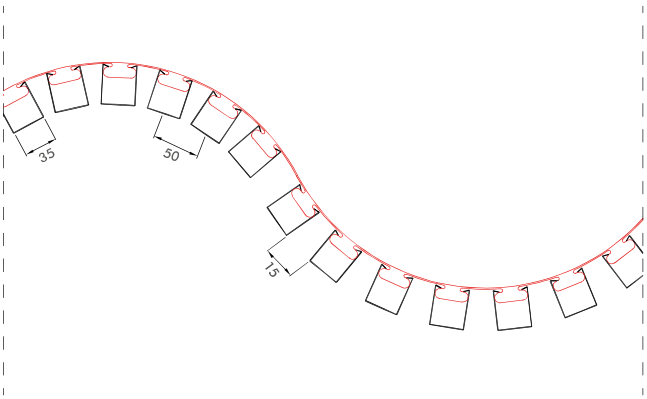

To be fixed to an existing curved structure

T1F - S (special) STRUCTURE

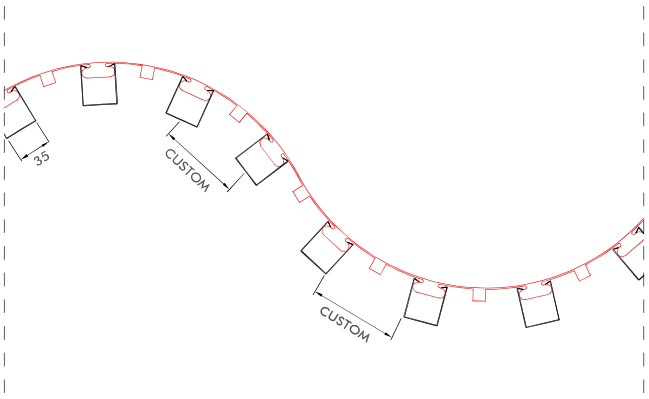

To be fixed to an existing curved structure

Main section - Outdoor ceiling installation

ANTI-RELEASE STRUCTURE
(minimum wheelbase)

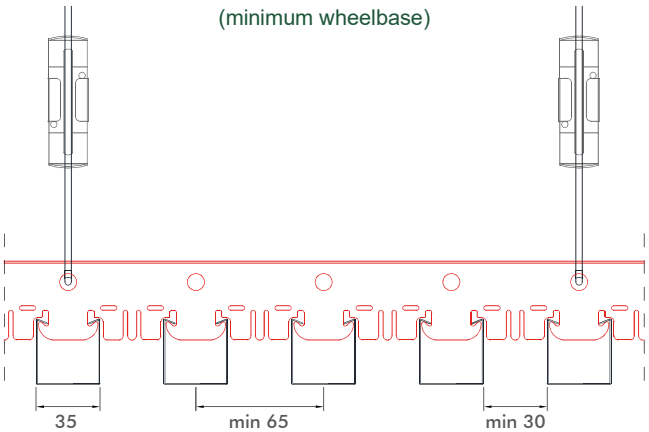

ANTI-RELEASE STRUCTURE
(custom wheelbase)

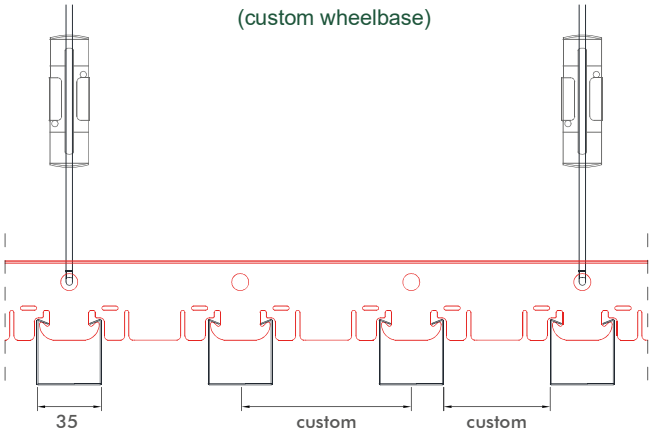

1_ OPEN TABS



2_ INSERT PLANK

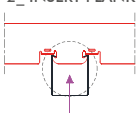

3_ CLOSE TABS

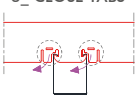

All dimensions are nominal and expressed in mm.
All details are subject to change without notice.
For any clarifications, please contact our commercial office - +39 0362 625652 - info@profilsystem.com

Main sections - Wall installation

T1F STRUCTURE

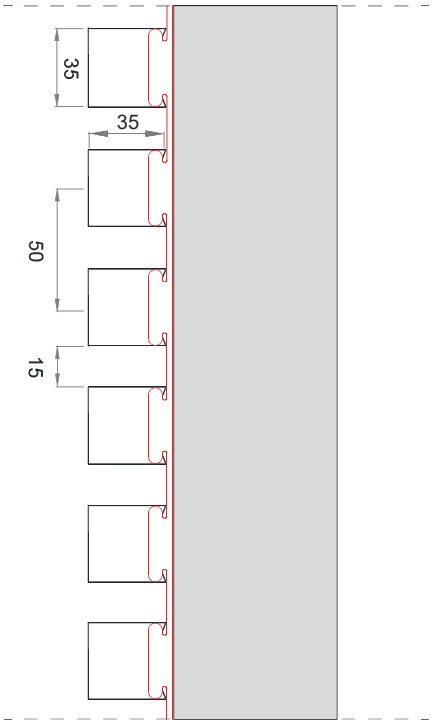

T1F - S (special) STRUCTURE

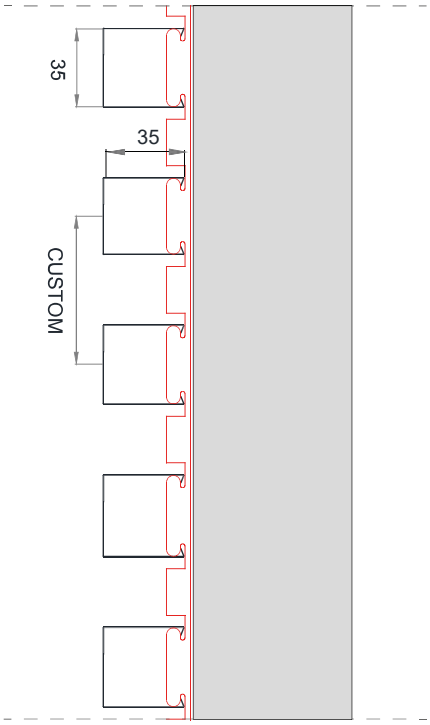

BRACKET

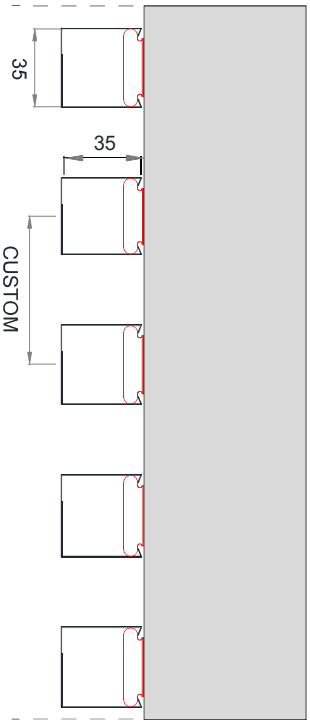

Configuration examples

STANDARD

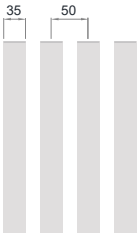

Plank: 35 mm
Gap: 15 mm
Wheelbase: 50 mm

SOME CUSTOM EXAMPLES

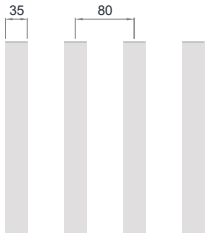

Plank: 35 mm
Gap: 45 mm
Wheelbase: 80 mm

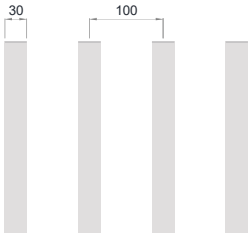

Plank: 35 mm
Gap: 65 mm
Wheelbase: 100 mm

Mounting system

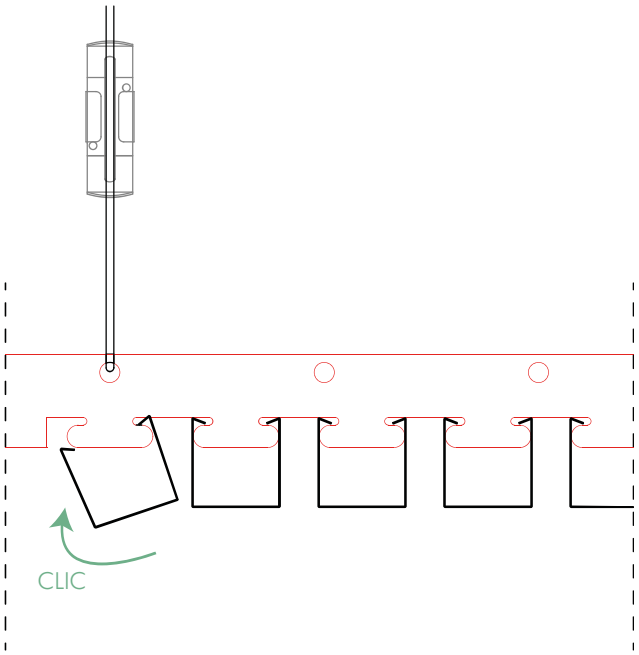

Joint mounting

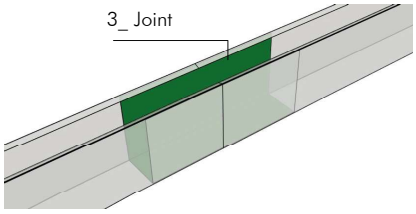

PHASE 1:
Joint mounting

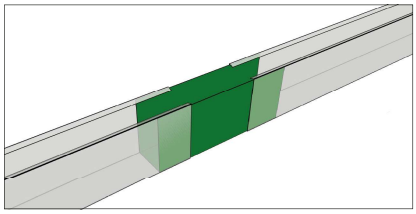

PHASE 2
Joint positioned and closed planks

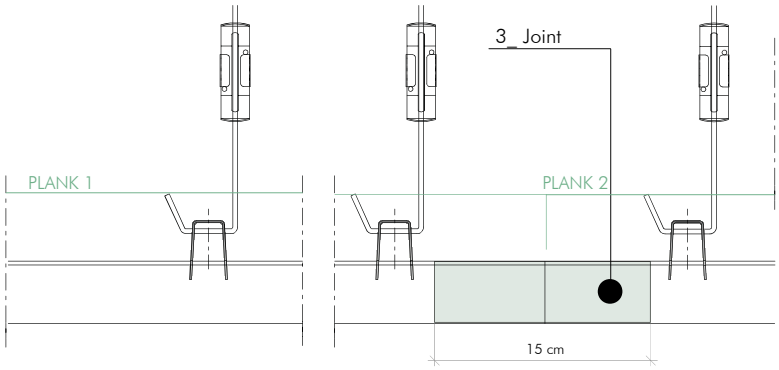

Example of detail created on site

Although any plank of the system can be removed, only a selected portion can be taken out to facilitate inspection.

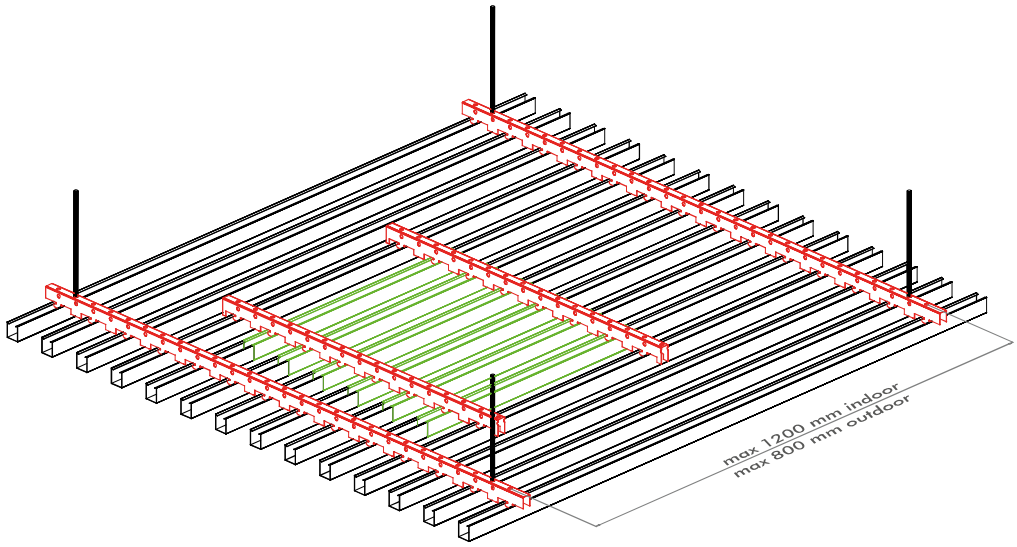

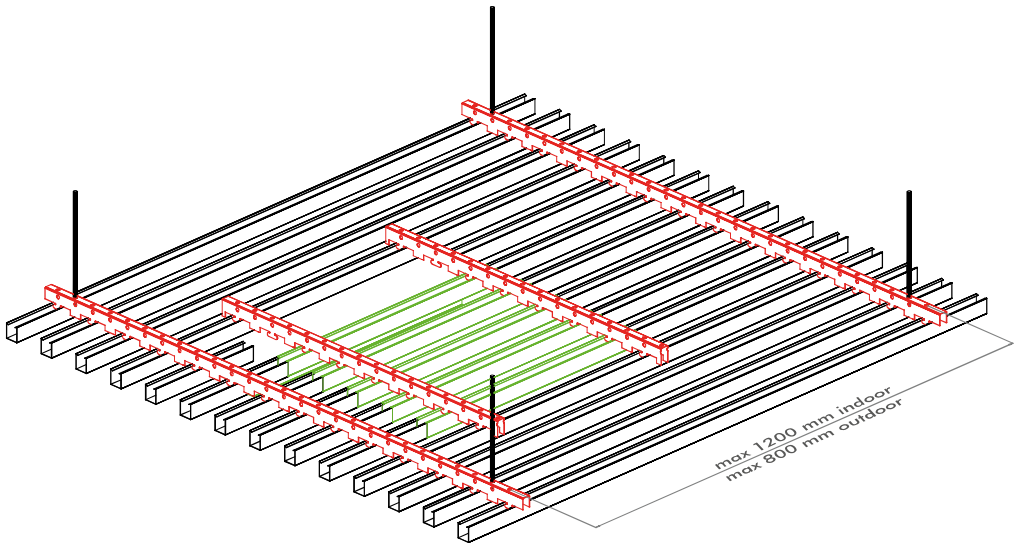

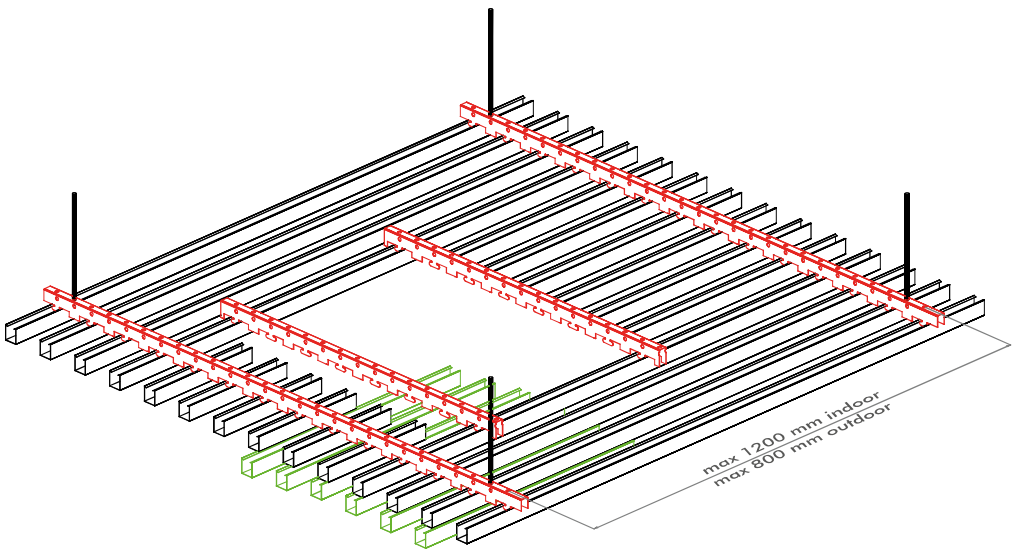

General informations

Technical standards

All Profilsystem products are CE marked according to EN 13964. They are also accompanied by the Declaration of Performance (D.O.P.) as required by European regulation 305/11 concerning the placing of construction products on the market.
For applications in particularly aggressive environments such as swimming pools, industrial installations with chemical and / or corrosive fumes, check the most suitable material and surface treatment with the technical or commercial office of Profilsystem.

Storage

All products are carefully packed and placed on special pallets and secured by strapping and film wrapping. On request we can provide the package complete of cardboard corners, bubble wrap and polystirene to reduce the risks during transport.

It is always recommended to handle all packaging with the most care, avoiding shocks and practices that damage the contents. The packed material is stored in closed, clean and dry places until the time of pic-up.
Do not expose filmed products to heat sources and do not leave theme under the sun.

Installation

The metal ceiling are installed manually by the installator depending on the type and model you choose.
The material should be stored in closed, clean and dry places until the time of installation.

Do not rest on the ground and not leave the products on site without the original package issued at the time of delivery.
Avoid the contact between material and water, solvents, degreasers and aggressive liquids.

Cleaning and Maintenance

Metal ceilings, thank to the easy washing and cleaning are also a guarantee in terms of hygiene.
To remove dust, stains or smudges you can use carefully a clean, dry cloth or moistened with neutral detergent, or non-abrasive and non-aggressive disinfectants.

PROFILSYSTEM®

Give life to your project

Our offices are at your disposal

ITALIA

Head quarter & showroom

Via Don Luigi Sturzo,3 - 20822 Seveso (MB) Italy

tel: +39 0362 625652 - fax: +39 0362 306733

www.profilsystem.com